SSSR Labs. KOTELNIKOV
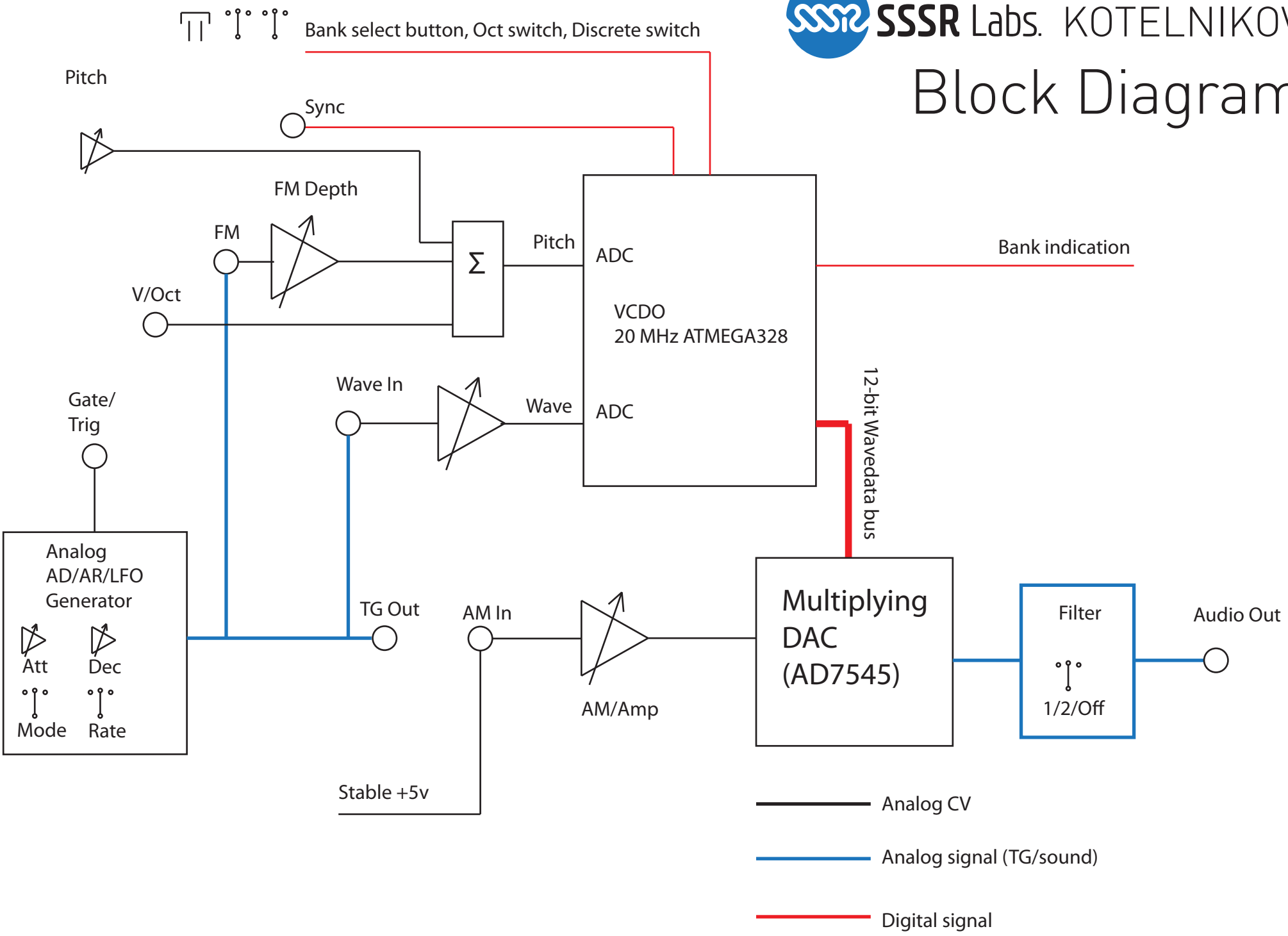
# Block Diagram